Gloss white art stock - 130gsm

Trimmed document size: 133 mm (w) x 152 mm (h) 28 pages

Book to be saddlestiched in 2 places

Printed in CMYK throughout with gloss Aq Varnish

GME

TX3345

5 watt super compact UHF CB remote LCD mic

INSTRUCTION MANUAL

AUSTRALIAN MADE

Full Spectrum Backlighting

Pure Sound

Advanced Signal Management

Dynamic Volume Control

RF Output

Warranty

CONTENTS

ACCESSORIES SUPPLIED

- Main Radio Unit
- Mounting Cradle
- Instruction Manual
- MC524B LCD Microphone
- Microphone Clip
- DC Lead
- Screw Pack

If any items are missing or damaged, please contact your retailer or place of purchase.

IMPORTANT INFORMATION CONCERNING 80 CH UHF CB RADIO

The use of the Citizen Band radio service is licensed in Australia by the ACMA radio communications (Citizens Band radio stations) Class Licence and in New Zealand by the Ministry of Economic Development New Zealand (MED). A General User Radio Licence for Citizens Band radio and operation is subject to conditions contained in those licences.

The class licence for users and equipment operating in the CB/PRS 477 MHz band has been amended. This radio meets the new 80 channel standard.

In simple terms the same amount of spectrum is available; however, radio transceivers can now operate in a narrower bandwidth and hence use less spectrum. These radios are generally referred to as narrowband or 12.5 kHz radios. By using 12.5 kHz channel spacing instead of 25 kHz, the 40 channels originally allocated can now be expanded to 80 channels thereby doubling the channel capacity and relieving congestion in the UHF CB/PRS band.

Original 40 channel wideband Radios will continue to operate on the original 40 channels, however they will not be able to converse on the newer channels 41 – 80. The newer narrowband radios will be able to converse with all older 40 channel wideband radios on all channels 1 to 40 as well as the newer channels allocated from 41 to 80.

The mixing of narrowband and wideband radios in the same spectrum can cause some possible operating issues of interference and varying levels of received volume.

POSSIBLE ISSUES

When a new narrowband radio receives a transmission from an older wideband radio the speech may sound loud and distorted – simply adjust your radio volume for best performance.

When an older wideband radio receives a signal from a new narrowband radio, the speech may sound quiet – simply adjust your radio volume for best performance.

There can be interference from a nearby transmitting radio if it is using a channel adjacent to the channel you are listening to. Simply try going up or down a few channels from the currently selected channel. The above situations are not a fault of the radio but a symptom of operating wideband and narrowband radios in the same bandwidth. This possible interference will decrease over time as the population of wideband radios ages and decreases.

Further information and updates are available from the Australian Communications and Media Authority (ACMA) at: www.acma.gov.au and the Ministry of Economic Development (MED), Radio Spectrum Management at: www.rsm.govt.nz

EMERGENCY CHANNELS

The ACMA has allocated channels 5/35 for emergency use only. Channel 5 is the primary Simplex Emergency Channel. Where a Channel 5 repeater is available, you should select Duplex on CH 5.

NOTE: Channel 35 is the input channel for the Channel 5 repeater therefore Channel 35 should also not be used for anything other than emergency transmissions.

TELEMETRY CHANNELS

ACMA regulations have allocated Channels 22 and 23 for telemetry-only applications and have prohibited the transmission of speech on these channels. Consequently the TX3345 has a transmit inhibit applied to channels 22 and 23.

In the event additional telemetry/telecommand channels are approved by the ACMA, these channels shall be added to those currently listed where voice transmission is inhibited. Currently transmissions on Channels 61, 62 and 63 are also inhibited and these channels are reserved for future allocation.

FEATURES
TRANSMIT (TX)
Individually Programmable DUPLEX function: User selectable for only those individual channels in your area that have repeaters, leaving the others free for use as extra simplex channels.
SIGNAL PROCESSING
Digital Signal Processing: Measures, filters and compresses standard analogue audio signals and converts them into digital format. Allows advanced RF and audio processing techniques to be applied to maximise the radio's performance.
Advanced Signal Management (ASM): Identifies interference caused by strong local signals on adjacent channels and prevents it from opening your Squelch.
Dynamic Volume Control (DVC): Automatically compensates for variations in received audio level resulting in a constant audio output level to the speaker.
SCANNING AND MEMORY FUNCTIONS
Microprocessor Controlled Frequency Synthesiser: Allows user programmable control of scanning, channel memories and selected feature options.
Programmable Scan Function: Scans the programmable UHF CB channels with both Group and Open scan functions available.
Priority Channel: A user programmable Priority Channel feature allows your working or local repeater Channel to be instantly recalled at the press of a button.
PRIVACY FUNCTIONS
In-Built SelCall: Selective Calling with five digit ANI and fully user-adjustable 5 tone transmitted SelCall Ident. Also allows naming of Idents for easier caller identification.
Quiet Mode: Selectable on individual channels, Quiet mode prevents incoming signals from being heard on selected channels unless preceded by your SelCall code.
CTCSS & DCS: A built-in Continuous Tone Coded Squelch System and Digital Coded Squelch option provides quiet channel operation.
PHYSICAL PROPERTIES
Overvoltage Protection: Special overvoltage detection circuitry protects the radio and warns of excessive voltage conditions by flashing the display.
USER CONTROLS AND INTERFACE
Controller Microphone: Complete control of the radio from the microphone simplifies installation.
High Contrast Liquid Crystal Display: Fully detailed LCD provides a visual indication of the selected channel and all selected functions at a glance. Backlit for viewing at night.

GENERAL OPERATION

MC524B MICROPHONE/CONTROLLER

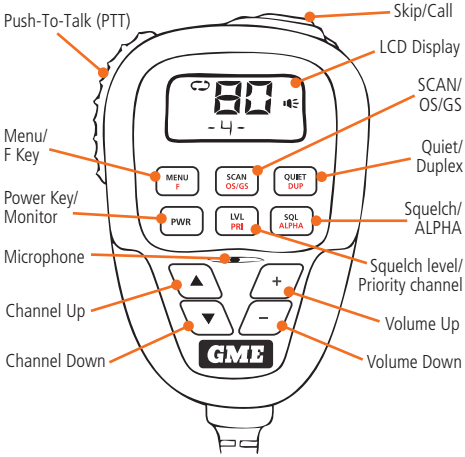

FUNCTION KEYS

There are several keys beneath the microphone controller's display that have dual functions. Their primary functions are printed in black and their secondary functions are printed in red.

To access the primary (black) functions

Press the key with the required function labelled in black. e.g. To control the Squelch, briefly press the SQL ALPHA key.

To access the secondary (red) functions

Press the Function key MENU F followed immediately by the key with the required function labelled in red.

NOTE: If the secondary key is not pressed within 10 seconds the MENU F key selection will time-out.

VOLUME KEY + −

Press the + key to increase the volume and the − key to decrease the volume.

NOTE: At minimum volume setting there is still sufficient volume to be heard in a quiet cabin environment.

DISPLAY

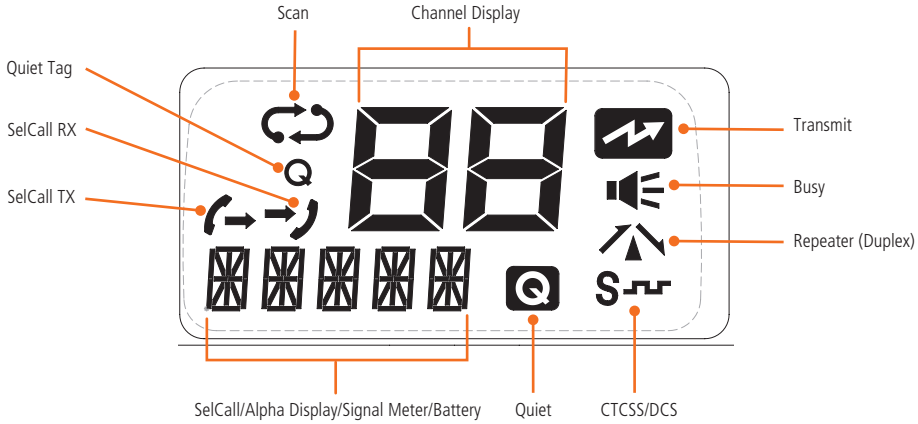

Selecting Channels

Press the ▲ or ▼ keys to step upwards or downwards one or more channels. Press and hold to advance through the channels at a faster rate.

TRANSMITTING

Prior to transmitting, always check the channel is not being used. This can be done by either listening or by checking the 🔈 indicator is not lit.

To transmit, press the **PTT** button. Hold the microphone about 5-8 cm from your face and speak at a normal voice level. The microphone is quite sensitive so it is not necessary to raise your voice or shout. Release the **PTT** when you have finished talking.

IMPORTANT: Always listen to ensure the channel is free before transmitting.

SQUELCH

The Squelch is used to eliminate the background noise when there are no signals present. The TX3345 features a preset Squelch system. The Squelch sensitivity has been factory set to provide optimum performance in most environments, however the sensitivity can be altered by the user if required, to suit varying environmental situations.

The Squelch can be opened or closed by pressing the SQL ALPHA key. When the Squelch is open, the receiver's background noise can be heard and 🔈 is displayed. When the Squelch is closed, the receiver remains quiet when there are no signals present but an incoming signal will override the Squelch and be heard in the speaker.

To open the Squelch

Briefly press the SQL ALPHA key. A low beep will be heard. If there are no signals present you will hear the receiver's background noise.

To close the Squelch

Briefly press the SQL ALPHA key again. A high beep will be heard and the receiver will become quiet.

NOTE: If an incoming signal is very weak and is close to the minimum Squelch level, it may become broken or 'chopped' by the Squelch action. To prevent this, simply open the Squelch to allow the signal to be heard clearly. Alternatively you can reduce the Squelch sensitivity as described below.

SQUELCH SENSITIVITY

The sensitivity of the Squelch to incoming signals can be set to suit your operating environment. In quiet rural locations a low setting will allow the weakest signals to be received while still keeping the radio quiet between transmissions. In city locations, a higher setting might be needed to ensure the Squelch remains closed when subjected to the higher interference levels often encountered in high density areas.

The TX3345 has nine (9) preset Squelch sensitivity settings labelled SQL-1 to SQL-9. The minimum Squelch setting (SQL-1) is the most sensitive and will allow the Squelch to open on very weak signals. SQL-9 is the maximum setting, requiring very strong signals to open the Squelch. The factory default is SQL-3 which generally provides reliable Squelch operation for most applications.

To adjust the Squelch sensitivity

1. Briefly press the LVL PRI key. 'SQL-X' will be displayed where X is a value from 1 to 9.
2. Press the ▲ or ▼ keys to change the Squelch value. The Squelch adjustment is live allowing you to adjust the Squelch to suit your current environment.
3. When your adjustment is complete, briefly press the LVL PRI key to return to normal operation.

NOTE: The Squelch level can also be adjusted within the Menu.

MENU

The Menu provides a convenient way to customise your radios settings. The following Menu options are available.

MENU ITEM	FUNCTION	AVAILABLE SETTINGS
SQL	Adjust Squelch Level	SQL--1 TO SQL--9
CTCSS	Set CTCSS or DCS Code	CTCOF CTC01 -> CTC50 DC001 -> DC104
LIGHT	Adjust Display Brightness	See Display
COLOR	Adjust Display Colour	See Display
WHITE	Adjust Colour Saturation	See Display
S-METER/ BATT	Display S-Meter or Battery Voltage on the LCD	S-MET / BATT
BEEP	Adjust Key Beep-Tone Volume	VOL--0 -> VOL--9
DVC	Activate/ Deactivate the Dynamic Volume Control	DVCOF / DVCON

To use the Menu

Press and hold the MENU/F key until the radio beeps. 'SQL' will be displayed indicating the first Menu item (Squelch setting mode) is selected.

Briefly press the MENU/F key to cycle through the Menu items.

Press the ▲ or ▼ keys to adjust the selected Menu item.

When finished, press and hold the MENU/F key to exit the Menu or wait until the Menu times out.

To adjust the Squelch sensitivity from the Menu

1. Press and hold the MENU/F key for several seconds. The radio will enter Menu mode and 'SQL' will be displayed.
2. Press the ▲ or ▼ keys to adjust the Squelch value.
3. When your adjustment is complete, briefly press the MENU/F key to return to normal operation.

BACKLIGHTING

The Liquid Crystal Display and keys are backlit for easy viewing at night. The backlight remains on while the radio is switched on. The backlighting brightness, colour and saturation are all fully adjustable for personal preference.

To adjust the Backlighting:

1. Press and hold the MENU/F key for several seconds. The radio will enter Menu mode and 'SQL' will be displayed.
2. Press the MENU/F key repeatedly until 'LIGHT' is displayed.
3. Press the ▲ or ▼ keys to adjust the backlight brightness.
4. Press the MENU/F key briefly. 'COLOR' is displayed.
5. Press the ▲ or ▼ keys to adjust the backlight colour. The full spectrum of colours is available.
6. Press the MENU/F key briefly. 'WHITE' is displayed.
7. Press the ▲ or ▼ keys to adjust the whiteness or colour saturation of the selected backlight colour from full colour to white (no colour).
8. To exit, press and hold the MENU/F key or wait for the Menu to time out.

TIP: For the deepest colour range, reduce the WHITE setting.

KEY BEEPS

The key beeps act as confirmation of your key presses. You can adjust the volume level of the beeps as follows.

1. Press and hold the MENU/F key for several seconds. The radio will enter Menu mode.
2. Press the MENU/F key repeatedly until 'BEEP' is displayed.
3. Press the ▲ or ▼ keys to adjust the beep volume from 0 (silent) to 9 (loud).
4. To exit, press and hold the MENU/F key or wait for the Menu to time out.

SIGNAL METER/BATTERY METER

The TX3345 includes a digital signal strength meter that shows the relative strength of incoming signals on the display. The meter displays signal strengths in values from 0 (very weak) to 9 (very strong). Signals that exceed strength 9 are shown as 9+

The TX3345 can also be set to display a battery meter instead of the signal meter. The battery meter displays the voltage of the connected power source with a resolution of 0.1 V. The Signal Meter is selected by default.

To switch between Signal Meter and Battery Meter:

1. Press and hold the MENU/F key for several seconds. The radio will enter Menu mode.
2. Press the MENU/F key repeatedly until 'S-MET' (S Meter) or 'BATT' (Battery) is displayed.
3. Press the ▲ or ▼ keys to select the required option.
4. To exit, press and hold the MENU/F key or wait for the Menu to time out.

PRIORITY CHANNEL

The Priority Channel feature allows you to store one channel as a Priority Channel that can be instantly recalled at the press of a key. This can be used to provide instant access to your working channel or your local repeater channel.

To store a Priority Channel

1. Select the required channel.
2. Briefly press the MENU/F key then press and hold the LVL/PRI key. The selected channel will flash followed by a high beep as the channel is stored.

To recall a Priority Channel

Briefly press the MENU/F key then briefly press the LVL/PRI key. The radio will switch straight to the selected Priority Channel. Any active functions (such as Scanning or Quiet) will be cancelled.

DUPLEX OPERATION

Duplex operation allows the radio to transmit on a different frequency to that which it receives allowing operation through repeater stations. Repeaters automatically re-transmit your signal over a wider area, providing greatly increased range.

Duplex operates only on channels 1-8 and 41-48. When duplex is selected on these channels, the radio receives on that channel but actually transmits 30 channels higher.

Simplex/Duplex Range Comparison

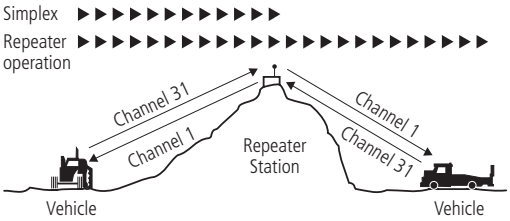

The TX3345 allows you to select Duplex operation individually on each channel.

To select Duplex:

1. Select the required channel 1-8 or 41-48.
2. Briefly press the MENU/F key then press the QUIET/DUP key. will appear on the display accompanied by a high beep.

To remove Duplex from a channel

1. Select the required channel 1-8 or 41-48. will be visible on the display.
2. Briefly press the MENU/F key then press the QUIET/DUP key. will disappear from the display accompanied by a low beep.

Channel Selected	Receive Channel	Transmit Channel
1	1	31
2	2	32
3	3	33
4	4	34
5*	5*	35*
6	6	36
7	7	37
8	8	38
41	41	71
42	42	72
43	43	73
44	44	74
45	45	75
46	46	76
47	47	77
48	48	78

*Emergency Channel only

DYNAMIC VOLUME CONTROL (DVC)

The modulation level of signals heard on the UHF CB band often vary considerably resulting in noticeable differences in received audio volume between stations. In the past, users have compensated for this by adjusting the volume control for each incoming signal. However with the introduction of 80 channel narrowband transmissions, the diversity in received audio volume has increased even further. The TX3345's Dynamic Volume Control is designed to automatically compensate for these variations in received audio level to provide a constant audio output level to the speaker.

To select the Dynamic Volume Control:

1. Press and hold the MENU key to enter the Menu.
2. Press the MENU key repeatedly until DVCxx is displayed.
3. Press the ▲ or ▼ keys to select DVCOF (Dynamic Volume Control Off) or DVCON (Dynamic Volume Control On).
4. When finished, press and hold the MENU key or wait for the Menu to time out.

CTCSS & DCS

CTCSS (Continuous Tone Coded Squelch System) and DCS (Digitally Coded Squelch) are Squelch quieting systems that allow several groups of users to share the same channel without disturbing each other. There are three optional tone sets available comprising 38, 50 or 104 codes.

CTCSS and DCS systems apply a continuous low-level low frequency tone to your transmission with a matching decoder at the receiver to control your radio's Squelch. With CTCSS or DCS enabled, the channel remains quiet to all incoming signals unless they carry the correct tone. When a transmission with the correct tone is received, the Squelch opens and remains open for as long as the signal is present. When the transmission ends, the channel becomes quiet again. Transmissions that do not use the correct tone will not be heard.

The TX3345 allows CTCSS or DCS to be enabled or disabled on selected channels and the CTCSS/DCS tone you select will be used for all CTCSS/DCS enabled channels in your radio.

CHOOSING THE CTCSS OR DCS TONE

Choosing which tone to use will probably be dependent on the other radios you talk to. If you talk to others outside your group who already use CTCSS or DCS tones, you will need to select the tone set and frequency that matches theirs. The TX3345 supports CTCSS 50 and CTCSS 38 tone sets as well as 104 DCS tones. If the users you talk to don't currently use CTCSS or DCS you can make your own choice.

There is no difference in performance between the different tone sets.

If using CTCSS you can chose either the 50 tone set or the 38 tone set. GME radios traditionally use the 50 tone set, however the 38 tone set is also included for compatibility with other radios.

To switch between the 50 and the 38 tone / set:

1. Switch the radio off.
2. Press and hold the SQL ALPHA key while switching the radio on again.
3. CTC50 or CTC38 will be displayed briefly to indicate the selected tone set.

TO SELECT A CTCSS OR DCS TONE

NOTE: When selecting tones, CTCSS tones are prefixed with 'CTC' and DCS tones are prefixed with 'DC'. Please refer to the CTCSS/DCS table later in this manual for a list of tone numbers and their associated frequencies.

1. Press and hold the MENU F key until the radio beeps.
2. Briefly press the MENU F key repeatedly until 'CTCxx' or 'DCxxx' is displayed (where xx represents a tone number in the CTCSS or DCS Tone Frequency Chart).
3. Press the ▲ or ▼ keys to scroll through the tone list and select the required CTCSS or DCS tone. CTCSS tones are grouped in the lower half of the list while DCS tones are grouped above the CTCSS tones.
4. If you wish to view the CTCSS frequency or DCS tone instead of the table number, briefly press the LVL PRI key. To return to the table code, briefly press the LVL PRI key again.
5. To disable CTCSS or DCS tones altogether scroll to the bottom of the list and select 'CTCoF'.
6. To store the setting, press and hold the MENU F key until the radio beeps or wait for it to time out.

ENABLING CTCSS/DCS ON A CHANNEL

Once a CTCSS or DCS tone has been selected, it can be enabled on individual channels.

1. Press the ▲ or ▼ keys to select the required channel.
2. Press and hold the SQL ALPHA key. A high beep will be heard and the S (CTCSS) or S (DCS) will appear indicating that the 'Silent' mode has been activated on that channel.

You may activate CTCSS or DCS on as many channels as you wish except channel 5 which is designated for emergency use.

DISABLING CTCSS/DCS ON A CHANNEL

1. Press the ▲ or ▼ keys to select the required channel. The S or S icon will be visible indicating that the 'Silent' mode is currently enabled on that channel.
2. Press and hold the SQL ALPHA key. A low beep will be heard and the S or S icon will disappear indicating that the 'Silent' mode has been disabled on that channel.

MONITORING THE CHANNEL

It is useful to be able to temporarily open your radio's Squelch to allow you to listen for signals from other CTCSS/DCS users outside your group. Because their CTCSS/DCS tone is different to yours, your Squelch would normally remain closed, preventing you from hearing them. You can use the SQL ALPHA key to open the Squelch and listen to the channel to check that it is clear before transmitting. This will help prevent you from accidentally transmitting over the top of others.

To monitor the channel

Briefly press the SQL ALPHA key. If there are no signals present, you will hear the usual hiss of an empty channel. Press the SQL ALPHA key again to restore the Squelch to its previous setting.

SCANNING

The TX3345 has a SCAN function that allows groups of user programmable channels to be scanned for signals. Channels can be scanned at 20 channels per second. When a signal is found, scanning will pause on that channel to allow the signal to be heard, then resume scanning when the channel is clear again.

SCAN GROUPS

The TX3345 features two scan groups by default - Open Scan and Group Scan.

Open Scan

Allows any of the installed channels to be scanned for activity. If a busy channel is found, scanning will pause to allow the signal to be heard. Once the channel has been clear for 5 seconds, scanning will resume automatically.

1 - 2 - 3 - 4 - 5 - 6 - 7 - 8

e.g. Scanning channels 1-8 in Open Scan.

Group Scan

Also allows any of the installed channels to be scanned for activity, but in addition, it inserts your Priority Channel into the scan sequence. This means that your Priority Channel will be monitored regularly while scanning to ensure that no calls are missed. Any signals received on your Priority Channel will take precedence over any signals received on the other channels.

1 - 2 - 3 - 4 - 20 - 5 - 6 - 7 - 8 - 20

e.g. Scanning channels 1-8 with Priority Channel 20 in Group Scan.

SELECTING A SCAN GROUP

To pre-select a scan group

The radio is initially set to Open Scan mode. To toggle between Scan Groups, press the [MENU F] key followed by the [SCAN OS/GS] key. 'Open' or 'Group' will be displayed briefly to confirm your selection.

PROGRAMMING SCAN CHANNELS

Your TX3345 is supplied with all 80 UHF CB channels programmed into the Open Scan memory. Any channels not needed, can be removed if required. The Group Scan memory is empty by default and you will need to add channels to it before use.

To add or remove channels from either scan memory

1. Ensure that the radio is not already scanning. If it is, briefly press the [SCAN OS/GS] key to cancel the scan function.
2. Ensure you have the required scan group selected (Open Scan or Group Scan.
3. Select the required channel by using the [▲] or [▼] keys
   - If ⚠ is visible to the right of the channel number, the selected channel is already in the scan memory.
   - If ⚠ is not visible, then the selected channel is not in the memory.
4. To add or remove the selected channel, press and hold the [SCAN OS/GS] key for a few seconds until a beep is heard.
5. Repeat step 3 & 4 to add or remove other channels in the scan memory.

To start scanning

To begin scanning, briefly press the [SCAN OS/GS] key. A high beep will be heard, the ⟲ icon will animate on the display and the radio will begin scanning. In addition the selected scan group will be displayed below the channel number.

NOTE: If there is only one channel programmed into the Open Scan memory or none in the Group Scan memory, a long low beep will be heard when you press the [SCAN OS/GS] key and the command will be ignored.

To stop scanning

To cancel the scan, briefly press the [SCAN OS/GS] key. A low beep will be heard and the ⟲ icon will disappear from the display.

OPEN SCAN MODE

Before scanning, select your preferred working channel using the ▲ or ▼ keys. Your working channel is the default channel your radio will transmit on when the PTT is pressed while scanning.

Scanning in Open Scan Mode

If a busy channel is found, the scan will pause on the channel to allow you to hear the signal and will resume scanning once the channel has been clear for 5 seconds. While the scan is paused, the icon will continue to animate on
the display to indicate that the scan function is still active.

To talk on your working channel while the radio is scanning, simply press the **PTT**. Scanning will pause and your radio will switch to your working channel allowing you to transmit and receive on that channel. When your conversation has finished and the channel has been clear for 5 seconds, scanning will resume.

If the scan pauses on any busy channel and you wish to talk on that channel, simply wait for a break in the conversation and press the **PTT**. The busy channel now becomes your working channel, replacing your previous working channel. Once your conversation has finished and the channel has been clear for 5 seconds, scanning will resume.

If you need to use your Priority Channel while your radio is scanning (perhaps for an urgent call or an emergency), briefly press the MENU F key followed by the LVL PRI key. The radio will jump straight to the Priority Channel and the Scan mode will be cancelled.

If you wish to remain on a busy channel, briefly press the SCAN OS/GS key while the scan is paused on that channel. The radio will exit Scan mode and remain on the busy channel.

GROUP SCAN MODE

Before scanning, store your preferred Priority Channel.

Scanning in the Group Scan Mode

When scanning, the radio scans all the channels programmed into the Group Scan memory, with the Priority Channel being scanned after every fourth channel.

If a signal appears on the Priority Channel – at any time – the receiver will switch straight to it and will stay there for as long as the Priority Channel is busy. During this time you can transmit on the Priority Channel in the usual way. Once there has been no activity for 5 seconds, the radio will resume scanning the other channels.

If a signal appears on one of the other channels, scanning will pause on that channel and will remain there while the channel is busy, as long as there are no signals on the Priority Channel. During this time the receiver will continue to check the Priority Channel for signals every 2 seconds, resulting in a series of small 'breaks' in the reception of the paused channel. Once there has been no activity on any channel for 5 seconds, the radio will resume scanning.

If your radio is paused on a busy channel and you wish to remain there, briefly press the SCAN OS/GS key. The radio will exit the Scan mode and remain on the busy channel.

NOTE: The radio will no longer be monitoring the Priority Channel (unless it is the same as the busy channel).
To resume scanning, press the SCAN OS/GS key again.

To transmit on the Priority (working) Channel AT ANY TIME while scanning, simply press the **PTT** key. The radio will switch straight to the Priority Channel. When you have finished your conversation and there has been no further activity on the Priority Channel for 5 seconds, the radio will resume scanning the other channels.

To go directly to the Priority Channel, briefly press the LVL PRI key. The radio will exit Scan mode.

AUTO SKIP

If while scanning, a busy channel becomes a nuisance by constantly causing the scan to pause, you can skip over it by pressing the **SKIP** button (or the ▲ or ▼ keys) while the radio is paused on that channel. This will temporarily remove the busy channel from the scan for 30 seconds to allow it time to become clear. The radio will then resume scanning from the next channel in the sequence. After 30 seconds the skipped channel becomes active in the scan again. You can use this method to temporarily remove multiple busy channels from the scan if required.

If the unwanted busy channel continues to delay the scan after the 30 second skip period has elapsed, you can completely remove that channel from the scan group for the duration of the current scan session by holding the SCAN OS/GS key while the radio is paused on that channel. The 'nuisance' channel will be removed from the scan group for the duration of that scan session. To restore the channel, simply stop and restart the scan session using the SCAN OS/GS key. You can use this method to remove multiple busy channels from the current scan session if required.

NOTE: In Group Scan mode you can also treat the Priority Channel as a nuisance channel and remove it from the scan session, but if you do, you will no longer be monitoring the Priority Channel while scanning. However if you press the PTT you will still be taken straight to the Priority Channel when required to converse on that channel. After your conversation has finished the scan will continue without the Priority Channel included.

QUICK CHANNEL SELECT

To quickly review or edit channels stored in the current scan memory, briefly press the MENU F key then press the ▲ or ▼ keys to manually step through the stored scan channels. Only those channels that have been stored in the current scan group memory will be displayed. During this time 'F' will remain on the display to confirm you are still in 'Quick Select' mode. To exit this mode, press the MENU F key again or wait 10 seconds for the function to time out.

USING TWO GROUP SCAN OR TWO OPEN SCAN MODES

If you prefer, the TX3345 can be re-programmed to have two Group Scan modes or two Open Scan modes instead of one of each.

Your TX3345 can be retailer programmed to convert the Group Scan mode into a second Open Scan mode and vice versa. If you would prefer to have two Group Scan or two Open Scan modes, you should contact your GME retailer to arrange for this feature to be enabled (when using two Group Scan modes the Priority Channel will be the same channel for both scan groups).

When the second Open or Group Scan mode is enabled, the resulting two Scan modes become Scan 1 and Scan 2.

To select the required Scan Mode

Press the MENU F key followed by the SCAN OS/GS key. 'Scan 1' or 'Scan 2' will be displayed to confirm your selection. When enabled, the two scan modes will be identical in operation.

NOTE: Enabling or disabling the second Open or Group Scan mode is not a user selectable option. Once enabled by your GME retailer, the changed Scan mode becomes a permanent part of the TX3345's features and replaces the standard Scan selection. If you find later that you need the original Group or Open Scan function re-enabled, you will need to return your TX3345 to your retailer for re-programming.

SELECTIVE CALLING

Your TX3345 has a Selective Calling system known as SelCall that operates like a telephone. Your radio is pre-programmed with its unique SelCall Identification Number. If this number is called by another radio, your TX3345 will beep to alert you. If you do not want to hear any other activity while waiting on a channel, you can select the Quiet mode. Your radio will then remain quiet to all incoming signals until your SelCall number is called.

Your TX3345 will allow you to store up to ten (10) most frequently called SelCall numbers, with each number being labelled for easy identification.

SELCALL IDENTIFICATION NUMBER (IDENT)

Your radio is factory programmed with its own unique SelCall Identification Number (Ident). This number identifies your radio from others. Your radio's own SelCall Ident will be displayed for a few seconds in the lower left of the channel display when you first turn your radio on. You will need to make this Ident known to others who may need to call you using SelCall.

NOTE: Although your radio is factory-programmed with a unique SelCall Ident, you can change your Ident to another number if required (see SelCall Memories on next page).

SELCALL IDENT LABELS

When storing SelCall Idents, you can add labels to each one to make it easier to identify whose Ident you are recalling. In addition, if an incoming SelCall matches one of your stored Idents, the label can be displayed instead of the Ident. To add or display labels, your radio must be in the ALPHA mode. To switch between ALPHA mode and Numeric Mode, briefly press the [MENU F] key followed by the [SQL ALPHA] key. 'ALPHA' or 'NUMER' will be displayed briefly to the lower left of the channel display to indicate the selected mode.

THE QUIET MODE

Your radio can be set to monitor signals on a busy channel but remain quiet unless it receives its own SelCall Ident. In this way, you won't be disturbed unless someone calls you. When your SelCall Ident is received, the Quiet mode is deactivated and an alarm sounds to alert you to the call. You can then converse normally on the channel. To use the Quiet mode, refer to the Quiet mode section further below. Note that activating the Quiet mode is not mandatory for SelCall operation. You can still use SelCall on any channel whether the Quiet mode is set or not.

TIP: The Quiet mode overrides the normal Squelch system to ensure that the radio remains quiet even when the channel is busy. When Quiet mode is set, you may see the icon appear on the display indicating the channel is being used, however, nothing will be heard in the speaker unless someone transmits your SelCall Ident. Quiet mode can be applied to individual channels so that some channels remain quiet while others are open to all incoming signals.

USING SELCALL

NOTE: The ACMA requires that cumulative SelCall transmissions should not exceed 3 seconds in any 60 second period. To meet this requirement with your TX3345 you should not send any more that 3 SelCall transmissions per minute.

ENTERING A SELCALL IDENT

1. Press the **CALL** button. is displayed, along with the last sent or received SelCall Ident. If an ALPHA label is displayed you will need to press [MENU F] then [SQL ALPHA] to switch to Numeric Mode.
2. Press and hold the [LVL PRI] key until the radio beeps. The right-hand digit of the SelCall Ident will flash.
3. Press the [▲] or [▼] keys to select the required number in the flashing digit position.
4. Briefly press the [LVL PRI] key again to select the next digit position.
5. Repeat steps 4 and 5 to enter all 5 digits as required. The SelCall number is now ready to send.
6. Press and hold the **CALL** button. A long beep will be heard and the radio will transmit the SelCall Ident.

NOTE: If the call is not sent within 10 seconds of entering the last Ident digit the Call function will time-out and the radio will return to normal mode. To exit the mode without sending the SelCall briefly press the **CALL** button.

CALL ACKNOWLEDGE

If your SelCall transmission is successful, the radio you called should respond with an 'acknowledge' signal – usually two quick beeps. This will confirm to you that the radio you called is now alerting its user to your signal.

SELCALL MEMORIES

Your radio is fitted with a 'Call' memory, an 'ID' memory and 10 user programmable storage memories as follows:

1. **'Call' memory** – always holds your last-sent SelCall Ident making it easy to resend it.
2. **'Id' memory** – holds your radio's own SelCall Ident. You should only select this memory location if you need to change your radio's factory programmed SelCall Ident.
3. **User programmable storage memories** – can be used to store and recall frequently called SelCall Idents. Memories are labelled 'C0' to 'C9'.

To store a SelCall Ident in memory

1. Briefly press the **CALL** button. is displayed along with the last sent or received SelCall Ident.
2. Press the ▲ or ▼ keys to select the required memory location 'C0' to 'C9' (to change your radio's own SelCall Ident, select 'Id'). If an ALPHA label is displayed you will need to press MENU F then SQL ALPHA to switch to Numeric Mode.
3. Press and hold the LVL PRI key until the radio beeps. The right-hand digit of the SelCall Ident will flash.
4. Press the ▲ or ▼ keys to select the required number in the flashing digit position.
5. Briefly press the LVL PRI key again to select the next digit position.
6. Repeat steps 4 and 5 to enter all 5 digits as required.
7. Now press and hold the LVL PRI key. The entire Ident will flash for a few seconds then the radio will beep as the new Ident is stored.

Recalling SelCall Idents from memory

1. Briefly press the **CALL** button. is displayed along with the last sent or received SelCall Ident.
2. Press the ▲ or ▼ keys to select the required Ident memory in locations 'C0' to 'C9'.
3. Press and hold the **CALL** button to send the Ident.

Changing your radio's own SelCall Ident

1. Ensure your radio is in Numeric Mode (press MENU F then SQL ALPHA as required until 'NUMER' is displayed).
2. Briefly press the **CALL** button. is displayed along with the last sent or received SelCall Ident.
3. Press the ▼ key. 'Id' will be displayed along with your radios own SelCall Ident.
4. Press and hold the LVL PRI key until the radio beeps. The right-hand digit of the SelCall Ident will flash.
5. Press the ▲ or ▼ keys to select the required number in the flashing digit position.
6. Briefly press the LVL PRI key again to select the next digit position.
7. Repeat steps 5 and 6 to enter all 5 digits as required.
8. Now press and hold the LVL PRI key. The entire Ident will flash for a few seconds then the radio will beep as the new Ident is stored.

LABELLING YOUR SELCALL IDENTS

You can label each SelCall Ident using a 5 character name to make it easier to identify callers. If an incoming SelCall matches one of those in your radio's memory, the label can be displayed instead of the SelCall Ident.

To select the ALPHA display mode

Briefly press the MENU/F key followed by the SQL/ALPHA key. 'ALPHA' or 'NUMER' will be displayed for 2 seconds on the lower left of the display to indicate the selected mode.

TIP: The normal channel display may give no indication of which display mode is selected. The selected more will only become obvious when displaying SelCall Idents.

Entering and storing a SelCall Label

NOTE: You must first store the required Ident in memory (as described above) before you can add an ALPHA label to it.

1. Briefly press the **CALL** button. will be displayed along with the last sent or received SelCall Ident.
2. Press the ▲ or ▼ keys to select the required Ident memory in locations 'C0' to 'C9'.
3. Briefly press MENU/F then SQL/ALPHA to select the ALPHA mode. ALPHA will be displayed briefly.
4. If the selected memory's ALPHA label is empty, '- - - - -' will be displayed, otherwise it will display the last ALPHA label that was programmed into that memory.
5. Press and hold the LVL/PRI key until the radio beeps. The left-hand position of the Alpha label will flash.
6. Press the ▲ or ▼ keys to select the required character in the flashing position then briefly press the LVL/PRI key again to select the next position.

The following characters are available:

A B C D E F G H I J K
L M N O P Q R S T U V
W X Y Z

0 1 2 3 4 5 6 7 8 9

SPACE * -

7. Repeat step 6 to enter up to 5 characters as required.
8. Now press and hold the LVL/PRI key. The entire Alpha label will flash for a few seconds then the radio will beep as the label is stored.

Repeat the steps above to add ALPHA labels to other SelCall Idents currently stored in memory.

To exit the mode, briefly press the **CALL** button (or simply wait 10 seconds and the Call function will time out). The radio will return to normal operation.

To display the Alpha labels of incoming SelCalls, the radio should be left in Alpha mode. Any incoming SelCall that does not match those in the memory will display -NEW-. To display the SelCall Ident of that caller, briefly press MENU/F then SQL/ALPHA to return to the Numeric Mode.

RECEIVING SELCALLS

When your radio receives its SelCall Ident, an alarm will sound to alert you to the call and the symbol will be displayed along with the SelCall Ident or ALPHA label of the caller. Initially the alarm will beep urgently at 2 beeps per second, then, if the call is not answered, it will slow to around 1 beep every 3 seconds. It will then continue to beep indefinitely until you cancel it.

To return the call

Press and hold the **CALL** button for a few seconds until the radio beeps. The callers SelCall will be sent back to the caller.

To cancel the alarm

Briefly press the **PTT** switch. The alarm will be cancelled and the channel will be open for normal communication. You can now talk on the channel in the usual way.

QUIET MODE

The Quiet Mode mutes the receiver to prevent incoming signals from being heard in the speaker until your SelCall Ident is received. This allows you to monitor a busy channel for personal calls without being disturbed by unwanted signals. Once your SelCall Ident is received, the Quiet Mode is cancelled and all incoming signals are heard in the speaker.

Setting up QUIET mode

To setup the Quiet mode you must first 'tag' the channels that you want to stay Quiet, then activate the Quiet Mode. Once the Quiet mode is activated, the tagged channels will remain quiet to all incoming signals unless your SelCall Ident is received. Channels that are not tagged will remain open to all signals and will operate normally.

To tag individual channels for QUIET operation

1. Select the required channel.
2. Press and hold the QUIET DUP key until the radio beeps. 'Q' will appear to the left of the channel number indicating the selected channel is now tagged for Quiet operation.

To remove the QUIET tag from individual channels:

1. Select a channel that has been tagged for Quiet operation. 'Q' will be displayed.
2. Press and **hold** the QUIET DUP key until the radio beeps. 'Q' will disappear indicating this channel is no longer tagged for Quiet operation.

Activating QUIET mode

1. Select a channel that has been tagged for Quiet operation (you cannot activate the Quiet mode unless a 'tagged' channel is selected). 'Q' will be displayed on that channel.
2. Briefly press the QUIET DUP key. Q will appear on the display.

The Quiet mode is now activated and all channels that were tagged for Quiet operation will now be operating in the Quiet mode.

Deactivating QUIET mode

1. Select any channel that has been tagged for Quiet operation. 'Q' and Q will be displayed on that channel.
2. Briefly press the QUIET DUP key. Q will disappear from the display and all channels that were tagged for Quiet operation will now operate normally again.

Receiving signals in QUIET mode

- If a normal signal is received on an Open channel (one that is not tagged with 'Q') the signal will be heard in the usual way.
- If a normal signal is received on a Quiet channel, the icon will be visible showing that the channel is busy, but no sound will be heard from the speaker.
- If your SelCall Ident is received on any channel – Open or Quiet – the Quiet mode will be cancelled and the alarm will beep to alert you to the call. In addition, the caller's Ident or ALPHA label will be displayed. All channels will now be open for normal transmission and reception.

If you wish to respond to the caller using SelCall, press and hold the **CALL** button until the radio beeps. The caller's Ident will be transmitted back to them causing the alarm in their radio to be activated.

To cancel the alarm on your radio, briefly press the **PTT**.

To return your radio to the Quiet mode, briefly press the QUIET DUP key. Q will re-appear on the display.

SCANNING IN QUIET MODE

The radio will allow you to scan while the Quiet mode is active. Using this feature you can monitor a group of Quiet channels or a combination of Quiet and Open channels.

To scan in the QUIET mode

1. Briefly press MENU F then SCAN OS/GS to select the required scan group (Open or Group scan).
2. Store the required channels in the selected scan memory as described under the Scanning section.
3. From those channels, select the ones you wish to remain Quiet and tag each one for Quiet operation (press and hold the QUIET DUP key).
4. Select a tagged channel and activate the Quiet mode (briefly press the QUIET DUP key).
5. To start scanning press the SCAN OS/GS key. The radio will begin scanning and the Q and flashing icons will be

displayed indicating that the radio is scanning in the Quiet mode.

Receiving signals while scanning in QUIET mode

- If a normal signal is received on an open channel, scanning will pause while the channel is busy and will resume scanning 5 seconds after the channel becomes clear. (If you were scanning in Group Scan mode, the radio may switch between the open channel and the Priority channel – this is normal).
- If a normal signal is received on a Quiet channel but your SelCall Ident is not detected, the signal will be ignored and scanning will continue.
- If a signal containing your SelCall Ident is received on any channel – Open or Quiet – both scanning and Quiet modes will be cancelled and the receiver will stay on that channel. In addition, the alarm will beep to alert you to the call and the callers Ident or ALPHA label will be displayed. The channel will now be open for normal transmission and reception.

TIP: To ensure reliable SelCall detection when scanning in the Quiet mode, it is recommended that you restrict the number of channels in the Scan group to 4 or less.

GROUP CALLING

The SelCall system includes a Group Call function which allows you to call up to 1000 radios simultaneously. This could be useful in an emergency situation where you may need to transmit a message to a large number of radios in your group.

By default your radio is factory set to allow up to 10 radios to be called at once. If required you can arrange for your dealer to re-program this option to allow 100 or 1000 radios to be called. The following description assumes the default Group Call setting of 10 radios.

The Group Call function works by allowing you to enter a special 'group code' into the last digit positions of the SelCall Ident you are sending. The 'group code' appears as an 'A' when displayed in the radio. When this 'group code' is received, it substitutes for all other numbers in that position.

As long as the first 4 digits of the SelCall you are sending match those of the radios you are calling, their SelCall alarm is activated as if their full 5 digit SelCall Idents had been received.

To achieve this, the 10 radios you are calling must be programmed with sequentially numbered SelCall Idents.

e.g. 14530, 14531, 14532, 14533.. -->, 14539

Transmitting the SelCall Ident 14531 will only activate the alarm in the radio with the SelCall Ident of 14531. However transmitting 1453A will activate the alarms in all radios with Idents 14530 through 14539 (a total of 10 radios).

If the radios in your fleet do not have sequentially numbered SelCall Idents and you want to make use of this function, you will need to re-program the SelCall Idents in your radios.

Sending a Group Call Ident

1. Press the **CALL** button. is displayed along with the last sent or received SelCall Ident. If an ALPHA label is displayed you will need to press [MENU F] then [SQL ALPHA] to switch to Numeric Mode.
2. Press and hold the [LVL PRI] key until the radio beeps. The right-hand digit of the SelCall Ident will flash.
3. Press the [▲] or [▼] keys to select 'A' in the flashing digit position. This is the special code that will create the Group Call.
4. Briefly press the [LVL PRI] key again to select the next digit position.
5. Continue entering the other 4 digits as required. The SelCall number is now ready to send.
6. Press and hold the **CALL** button. A long beep will be heard and the radio will transmit the SelCall Ident.

Programming group calls for 100 radios (when this is enabled in your radio) is identical except that you will need to select 'A' for the last 2 digits (eg. 123AA). For 1000 radios you will need to select 'A' for last 3 digits (eg. 12AAA).

e.g.

Sending Ident 145AA will call 100 radios with Idents 14500 -> 14599

Sending Ident 14AAA will call 1000 radios with Idents 14000 -> 14999

You can also arrange to send SelCalls to every tenth radio by setting the second digit to A.

e.g. Sending Ident 145A5 will call radios 14505, 14515, 14525, 14535.. --> 14595

Call acknowledge in Group mode

There is no call acknowledge when sending group calls. This is to prevent all the radios in your group from trying to respond to your SelCall transmission at the same time.

Storing Group Call Idents

Group Call Idents can be stored in memory in the same way as a standard SelCall Ident.

Receiving Group Calls

Receiving a Group Call is identical to receiving a normal SelCall except that the alarm sound is a LOW tone beep instead of the normal HIGH tone beep. The Callers' Ident or ALPHA Name appears on the display in the usual way.

INSTALLATION

The TX3345 main unit is supplied with a slim, U-shaped mounting cradle. The cradle can be screwed or bolted in any convenient location in your vehicle (under or above the dash, on the centre console, etc.) using the mounting slots provided in the cradle. The TX3345 contains a built-in speaker, and should be installed in a convenient location in the vehicle's cabin as the radio's loud speaker. Alternatively it can be installed in a less audible location and an extension speaker used instead.

The LCD Controller Microphone comes complete with a mounting clip. Its small size and light weight design allows it to be mounted in almost any convenient position accessible to the driver.

When installing the radio, avoid mounting it close to heaters or air conditioners. Screw the LCD Controller Microphone's clip to a firm surface. Fit the TX3345 into the cradle and tighten the gimbal knobs. Place the LCD Controller Microphone in its mounting clip. Finally, plug the LCD Controller Microphone into the front panel of the TX3345 and the power and antenna leads to the sockets provided on the rear of the radio.

ANTENNA INSTALLATION

It is essential to select a good quality, high efficiency, 477 MHz antenna. A poor quality antenna or one not designed for the specific frequency band you are using will give very poor performance.

GME have a wide range of suitable 477 MHz UHF CB antennas to suit most installations and applications. We recommend contacting your local GME retailer for advice.

Connect to the antenna cable to the rear antenna socket using a PL259 coaxial connector.

Noise Suppression

The inherent design of FM transceivers result in a high level of resistance to ignition and electrical interference. However in some installations it may be necessary to take additional steps to help reduce or eliminate noise interference. During installation, try to route the DC battery leads, the antenna lead or any accessory wires away from the engine compartment, ignition or alternator wiring. If the noise continues, try fitting a suppression kit in which case we recommend you consult an auto electrician for advice specific to your installation.

Higher frequency electrical interference caused by electric motors can be suppressed directly at the motor terminals.

Fitting the LCD controller microphone

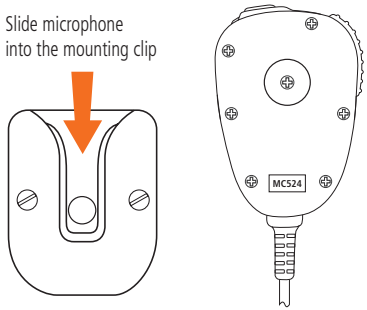

Mounting the cradle

The mounting bracket can be oriented with the arms extending either forward or backwards to adjust the position of the front panel with reference to the mounting point

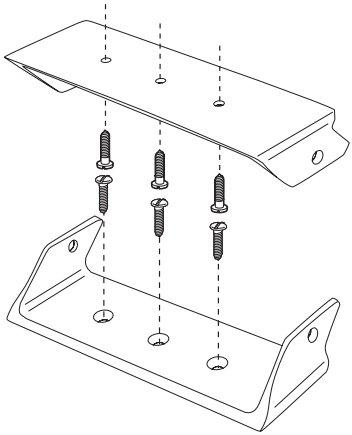

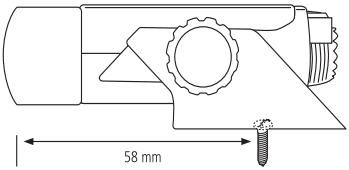

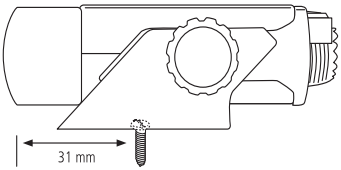

Fitting the radio

Fit radio into cradle and tighten gimbal knobs.

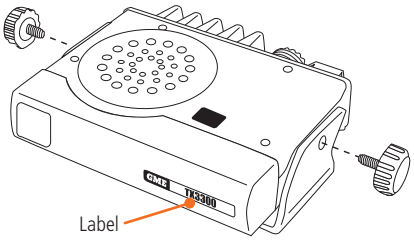

Once the orientation of your radio is confirmed, you can fit the GME model label. Simply remove the backing tape and press into the recess on the front panel.

Fitting the microphone

The microphone uses an 8 pin plug and socket.

To fit the microphone:

1. Position the microphone plug so the plastic tab faces downwards, and press the plug into the socket until it ‘clicks’.
2. Gently slide the rubber boat towards the hole surrounding the socket until it is flush with the front panel.

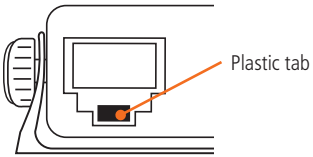

Removing the microphone

1. Slide the rubber boot back along the microphone cord.
2. Squeeze the plastic tab on the microphone plug towards the plug to unlock it while gently pulling the plug outwards. If the plug does not come out easily, the tab has not released correctly and should be squeezed again.

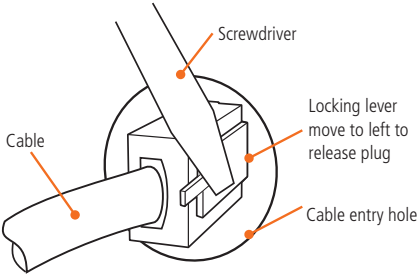

DC POWER CONNECTION

The TX3345 is designed for 13.8 volts DC, negative earth installations only (i.e. where the negative terminal of the battery is connected to the chassis or frame of the vehicle).

There are two recommended methods of installation.

Radio remains ON when the ignition switch is OFF

Connect the radio's negative (black) lead to the vehicle's chassis, or if preferred, directly to the battery's negative terminal.

The radio's positive (red) lead should be connected via the 2 amp fuse to the battery's positive terminal. Alternatively, the positive lead could be connected into the fuse box at a point that has +13.8 volts continuously available (the battery side of the ignition switch) via the 2 amp fuse.

Radio turns OFF with the ignition switch:

Connect the radio's negative (black) lead to the vehicle's chassis, or if preferred, directly to the battery's negative terminal.

The radio's positive (red) lead should connect to an accessory point in the vehicle's fuse box via the 2 amp fuse. This point should supply +13.8 volts only when the ignition switch is turned ON or in the ACCESSORY position.

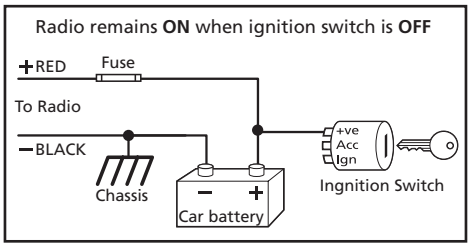

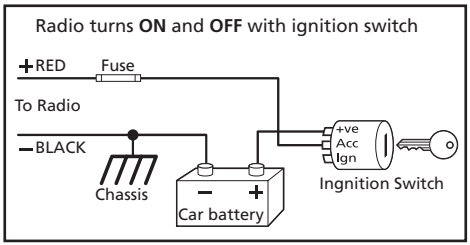

HIGH VOLTAGE WARNING

The TX3345 has a built-in, high voltage detection system to warn you if an overvoltage situation occurs.

If the power supply voltage exceeds 18 volts DC, the channel display will flash 'hi dc' for 5 seconds when the unit is first turned ON, or at the time the voltage exceeds 18 volts. In addition, when transmitting, the TX indicator will flash and the transmitter will select low output power.

If the overvoltage warning appears you should switch your TX3345 OFF and disconnect it from the power source before locating the cause of the trouble.

Once the high voltage warning has been triggered and you have fixed the source of the problem, you will need to switch the TX3345 OFF then ON again to reset it.

The power source must not exceed 25 volts otherwise permanent damage may occur to your radio, which may not be covered by the manufacturer's warranty.

ANTENNA CONNECTION

GME supply a wide range of mobile and base station antennas designed specifically for UHF CB communications.

The antennas are fitted with a PL259 coaxial plug suitable for connection to the antenna socket on the rear panel of the radio.

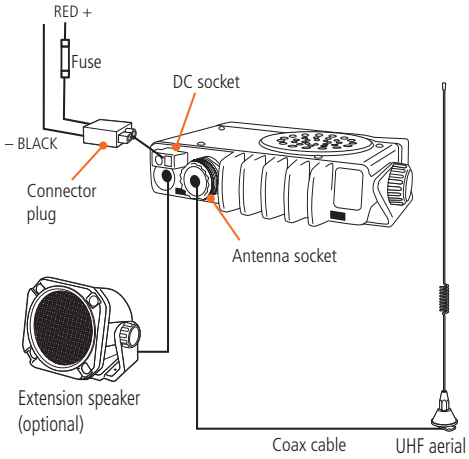

CTCSS TONE FREQUENCY CHART								
50 Tone Set	38 Tone Set	Frequency	50 Tone Set	38 Tone Set	Frequency	50 Tone Set	38 Tone Set	Frequency
1	1	67.0	18	17	118.8	35	-	183.5
2	-	69.4	19	18	123.0	36	30	186.2
3	2	71.9	20	19	127.3	37	-	189.9
4	3	74.4	21	20	131.8	38	31	192.8
5	4	77.0	22	21	136.5	39	-	196.6
6	5	79.7	23	22	141.3	40	-	199.5
7	6	82.5	24	23	146.2	41	32	203.5
8	7	85.4	25	24	151.4	42	-	206.5
9	8	88.5	26	25	156.7	43	33	210.7
10	9	91.5	27	-	159.8	44	34	218.1
11	10	94.8	28	26	162.2	45	35	225.7
12	11	97.4	29	-	165.5	46	-	229.1
13	12	100.0	30	27	167.9	47	36	233.6
14	13	103.5	31	-	171.3	48	37	241.8
15	14	107.2	32	28	173.8	49	38	250.3
16	15	110.9	33	-	177.3	50	-	254.1
17	16	114.8	34	29	179.9			
CTCSS Frequency shown in Hz								

DCS TONE CHART											
DCS	CODE	DCS	CODE	DCS	CODE	DCS	CODE	DCS	CODE	DCS	CODE
1	023	19	116	37	225	55	325	73	452	91	627
2	025	20	122	38	226	56	331	74	454	92	631
3	026	21	125	39	243	57	332	75	455	93	632
4	031	22	131	40	244	58	343	76	462	94	654
5	032	23	132	41	245	59	346	77	464	95	662
6	036	24	134	42	246	60	351	78	465	96	664
7	043	25	143	43	251	61	356	79	466	97	703
8	047	26	145	44	252	62	364	80	503	98	712
9	051	27	152	45	255	63	365	81	506	99	723
10	053	28	155	46	261	64	371	82	516	100	731
11	054	29	156	47	263	65	411	83	523	101	732
12	065	30	162	48	265	66	412	84	526	102	734
13	071	31	165	49	266	67	413	85	532	103	743
14	072	32	172	50	271	68	423	86	546	104	754
15	073	33	174	51	274	69	431	87	565		
16	074	34	205	52	306	70	432	88	606		
17	114	35	212	53	311	71	445	89	612		
18	115	36	223	54	315	72	446	90	624		

UHF CB OPERATING FREQUENCIES

CH	Frequency (MHz)	CH	Frequency (MHz)	CH	Frequency (MHz)	CH	Frequency (MHz)
1	476.425	21	476.925	41	476.4375	61	476.9375
2	476.450	22	476.950	42	476.4625	62	476.9625
3	476.475	23	476.975	43	476.4875	63	476.9875
4	476.500	24	477.000	44	476.5125	64	477.0125
5	476.525	25	477.025	45	476.5375	65	477.0375
6	476.550	26	477.050	46	476.5625	66	477.0625
7	476.575	27	477.075	47	476.5875	67	477.0875
8	476.600	28	477.100	48	476.6125	68	477.1125
9	476.625	29	477.125	49	476.6375	69	477.1375
10	476.650	30	477.150	50	476.6625	70	477.1625
11	476.675	31	477.175	51	476.6875	71	477.1875
12	476.700	32	477.200	52	476.7125	72	477.2125
13	476.725	33	477.225	53	476.7375	73	477. 2375
14	476.750	34	477.250	54	476.7625	74	477.2625
15	476.775	35	477.275	55	476.7875	75	477.2875
16	476.800	36	477.300	56	476.8125	76	477.3125
17	476.825	37	477.325	57	476.8375	77	477.3375
18	476.850	38	477.350	58	476.8625	78	477.3625
19	476.875	39	477.375	59	476.8875	79	477.3875
20	476.900	40	477.400	60	476.9125	80	477.4125

	Emergency use only
	Telemetry / SelCall use only. Voice transmission is inhibited as required by AS/NZS 4365.2011
	Guard band channel. Transmission is inhibited as required by AS/NZ 4365.2011
	Repeater input channels (Duplex)

	Repeater output channels (Duplex)
11	Officially designated call channel
40	Road channel
18	Caravan and motorhome
10	4WD / Offroad

SPECIFICATIONS*

ENVIRONMENTAL

Temperature Range: -10°C to +60°C

ELECTRICAL

General

Compliant Specification: AS/NZS 4365
Frequency Range: 476.425 – 477.4125 MHz
Number of Channels: 80 UHF CB
Channel Spacing: 12.5 kHz
Operation Mode: Simplex channels 1 – 80
Semi Duplex channels 1 – 8
41 – 48.
Scanning Speed: 20 channels per second
Antenna Impedance: 50 Ohms nominal
Operating Voltage Range: 10 – 15 volts DC
Nominal Battery Voltage: 13.8 volts DC
Over Voltage Protection: 25 volts DC max. At 18 volts DC the RF power is reduced, and the words 'Hi DC' flash.
Over Current Protection: In-line 2A Fuse
Reverse Polarity Protection: Shunt Diode
Frequency Stability: ±2.5 PPM
SelCall Tone Length: 40 ms

Transmitter

RF Output: 5.0 watts max.
Modulation: FM
Maximum Deviation: < ± 2.5 kHz at + 20 dB limiting
Spurious Emissions: < -70 dBc
Transmit Frequency Response: +6 dB per octave
300 Hz to 3 kHz + 1-3 dB.
Audio Signal to Noise: > 45 dB
Current Consumption: 1.5 amps with 50 Ohms termination

Receiver

Circuit Type: Double conversion Superheterodyne.
Intermediate Frequencies: 1st – 21.54 MHz
2nd – 450 kHz.
Current Consumption: < 180 mA muted
600 mA @ max. A.F Output.
Sensitivity: -123 dBm for 12 dB SINAD unweighted.
Selectivity: -6 dB at + 3.5 kHz
-60 dB at ± 12.5 kHz.
Intermodulation Immunity: 73 dB
Blocking Immunity: 100 dB
Spurious Response Immunity: 70 dB
Audio Power: 3 watts average into 4 Ohms
Audio Signal to Noise: > 45 dB
Receive Frequency Response: -6 dB/Octave de-emphasis
300 Hz to 3 kHz + 1 – 3 dB.
Conducted Spurious Emission: < -57 dBm

MECHANICAL

Dimensions: 102 (W) x 87 (D) x 23 (H) mm
Weight: 158 grams
Shock and Vibration: MIL STD 810 method

***Specifications are typical unless otherwise indicated and may be subject to change without notice or obligation.**

STANDARD COMMUNICATIONS CONTRACT WARRANTY AGAINST DEFECTS

TThis warranty against defects is given by Standard Communications Pty Ltd ACN 000 346 814 (We, us, our or GME). Our contact details are set out in clause 2.7. This warranty statement only applies to products purchased in Australia. Please contact your local GME distributor for products sold outside of Australia. Local distributor details at www.gme.net.au/export.

1. Consumer guarantees

1.1 Our goods come with guarantees that cannot be excluded under the Australian Consumer Law. You are entitled to a replacement or refund for a major failure and for compensation for any other reasonably foreseeable loss or damage. You are also entitled to have the goods repaired or replaced if the goods fail to be of acceptable quality and the failure does not amount to a major failure.

1.2 To the extent we are able, we exclude all other conditions, warranties and obligations which would otherwise be implied.

2. Warranty against defects

2.1 This Warranty is in addition to and does not limit, exclude or restrict your rights under the Competition and Consumer Act 2010 (Australia) or any other mandatory protection laws that may apply.

2.2 We warrant our goods to be free from defects in materials and workmanship for the warranty period (see warranty table) from the date of original sale (or another period we agree to in writing). Subject to our obligations under clause 1.2, we will at our option, either repair or replace goods which we are satisfied are defective. We warrant any replacement parts for the remainder of the period of warranty for the goods into which they are incorporated.

2.3 To the extent permitted by law, our sole liability for breach of a condition, warranty or other obligation implied by law is limited

(a) in the case of goods we supply, to any one of the following as we decide -

(i) the replacement of the goods or the supply of equivalent goods;

(ii) the repair of the goods;

(iii) the cost of repairing the goods or of acquiring equivalent goods;

(b) in the case of services we supply, to any one of the following as we decide –

(i) the supplying of the services again;

(ii) the cost of having the services supplied again.

2.4 For repairs outside the warranty period, we warrant our repairs to be free from defects in materials and workmanship for three months from the date of the original repair. We agree to re-repair or replace (at our option) any materials or workmanship which we are satisfied are defective.

2.5 We warrant that we will perform services with reasonable care and skill and agree to investigate any complaint regarding our services made in good faith. If we are satisfied that the complaint is justified, and as our sole liability to you under this warranty (to the extent permitted at law), we agree to supply those services again at no extra charge to you.

2.6 To make a warranty claim you must before the end of the applicable warranty period (see warranty table), at your own cost, return the goods you allege are defective, provide written details of the defect, and give us an original or copy of the sales invoice or some other evidence showing details of the transaction.

2.7 Send your claim to: Standard Communications Pty Ltd. PO Box 96 Winston Hills NSW 2153, Australia. Tel: (02) 8867 6000 Fax: (02) 8867 6199. Email: servadmin@gme.net.au

2.8 If we determine that your goods are defective, we will pay for the cost of returning the repaired or replaced goods to you, and reimburse you for your reasonable expenses of sending your warranty claim to us.

3. What this warranty does not cover

3.1 This warranty will not apply in relation to:

(a) goods modified or altered in any way;

(b) defects and damage caused by use with non Standard Communications products;

(c) repairs performed other than by our authorised representative;

(d) defects or damage resulting from misuse, accident, impact or neglect;

(e) goods improperly installed or used in a manner contrary to the relevant instruction manual; or

(f) goods where the serial number has been removed or made illegal.

4. Warranty period

4.1 We provide the following warranty on GME and Kingray products. No repair or replacement during the warranty period will renew or extend the warranty period past the period from original date of purchase.

PRODUCT TYPE	WARRANTY PERIOD
477 MHz UHF CB mobile	5 years

1300 463 463 **gme.net.au**

A division of Standard Communications Pty Ltd.
Head Office: PO Box 96, Winston Hills, NSW 2153, Australia.
New Zealand: PO Box 58, 446 Botany, Auckland 2163 (09) 274 0955
All other international enquiries email: **export@gme.net.au**

Part Number: 310565 Drawing Number: 46397-2